ZODIAC

MARINE SOLAS

ROUND CONTAINER
25 PERSON DAVIT LAUNCHED SELF RIGHTING LIFERAFT

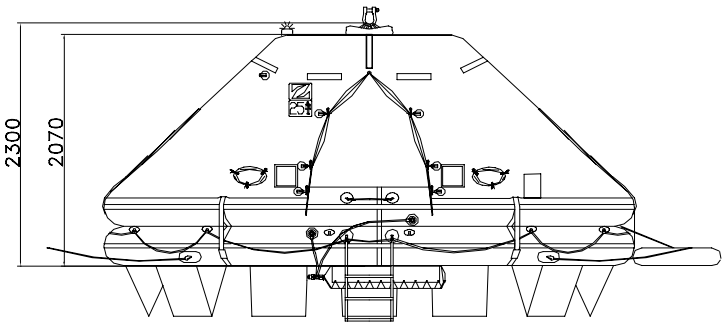

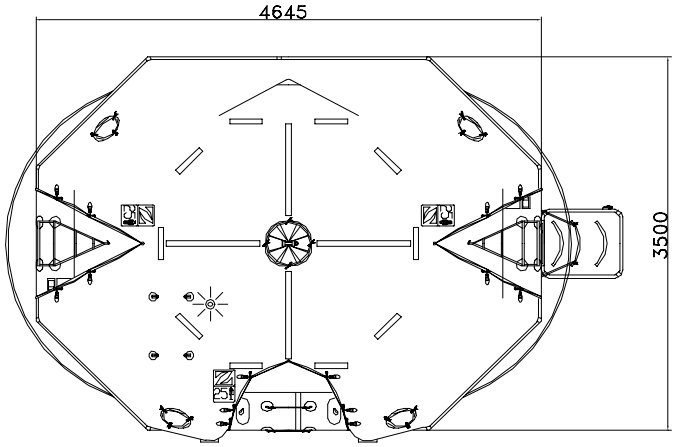

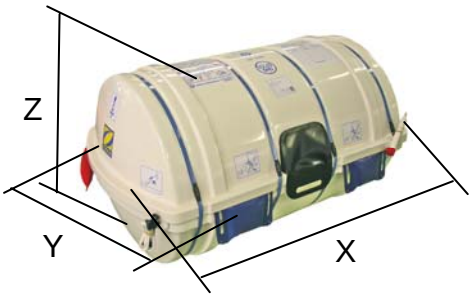

TECHNICAL INFORMATION

25 MAN	A PACK			B PACK		
Container	N16B			N22B		
Dimensions	X: 1450 mm	Y: 800 mm	Z: 740 mm	X: 1530 mm	Y: 680 mm	Z: 620 mm
	X: 4 ' 9,09 "	Y: 2 ' 7,5 "	Z: 2 ' 5,14 "	X: 5 ' 0,24 "	Y: 2 ' 2,78 "	Z: 2 ' 0,41 "
Liferaft Net Weight	220 kg / 486 pounds			160 kg / 353 pounds		
Max. height stowage	25 m / 83 '			25 m / 83 '		
Painter line length	35 m / 115 '					
Inflation Cylinder	1 x 27 liter					

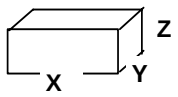 Crate	X: 1525 mm	Y: 845 mm	Z: 880 mm	X: 1610 mm	Y: 720 mm	Z: 820 mm
	X: 5 ' 0,04 "	Y: 2 ' 9,27 "	Z: 2 ' 10,65 "	X: 5 ' 3,39 "	Y: 2 ' 4,35 "	Z: 2 ' 8,29 "
	260 kg / 574 pounds			200 kg / 441 pounds		
	1,134 m3 / 40,05 cubic foot			0,951 m3 / 33,57 cubic foot		

Towing force	2 knots	3 knots
Without sea anchor	53 daN	170 daN
With sea anchor	61 daN	190 daN

Approvals:	EC (MED) – TC – BV

25 DL SR cont rond Zodiac 03122007 KLT.doc	Issue : 3	Date: 03/12/2007

Dimensions and weight +/- 5% Zodiac reserves the right to change specification without notice.
For installation, add minimum +10mm for clearance to dimensions of the container.