MARINE SOLAS

ROUND CONTAINER
37 PERSON DAVIT LAUNCHED SELF RIGHTING LIFERAFT

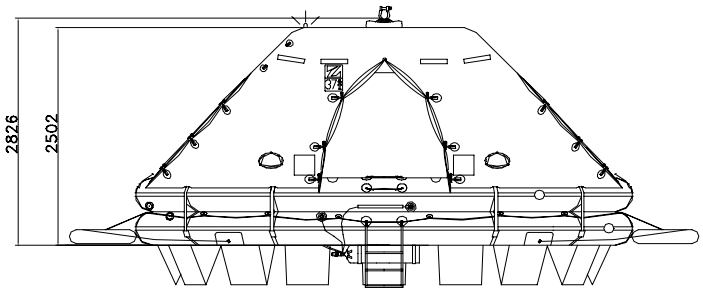

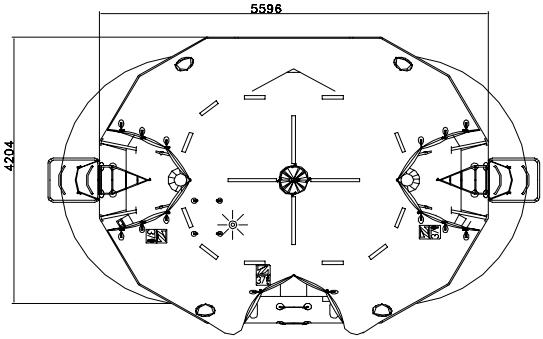

TECHNICAL INFORMATION

37 MAN	A PACK			B PACK		
Container	**N17B**			**N18B**		
Dimensions	X: 1500 mm	Y: 950 mm	Z: 945 mm	X: 1560 mm	Y: 852 mm	Z: 835 mm
	X: 4 ' 11,06 "	Y: 3 ' 1,41 "	Z: 3 ' 1,21 "	X: 5 ' 1,42 "	Y: 2 ' 9,55 "	Z: 2 ' 8,88 "
Liferaft Net Weight	330 kg / 728 pounds			230 kg / 508 pounds		
Max. height stowage	25 m / 83 '			25 m / 83 '		
Painter line length	35 m / 115 '					
Inflation Cylinder	1 x 20 liter + 1 x 24 liter					

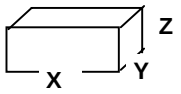	X: 1580 mm	Y: 1050 mm	Z: 1130 mm	X: 1640 mm	Y: 940 mm	Z: 1010 mm
	X: 5 ' 2,21 "	Y: 3 ' 5,34 "	Z: 3 ' 8,49 "	X: 5 ' 4,57 "	Y: 3 ' 1,01 "	Z: 3 ' 3,77 "
	396 kg / 874 pounds			285 kg / 629 pounds		
Crate	1,875 m3 / 66,2 cubic foot			1,558 m3 / 54,98 cubic foot		

Towing force	**2 knots**	**3 knots**
Without sea anchor	170 daN	365 daN
With sea anchor	210 daN	450 daN

Approvals:	**EC (MED) – TC – BV**

37 DL SR cont rond Zodiac 22112006 KLT.doc	Issue : 2	Date: 22/11/2006

Dimensions and weight +/- 5% Zodiac reserves the right to change specification without notice.
For installation, add minimum +10mm for clearance to dimensions of the container.