ZODIAC

MARINE SOLAS

ROUND CONTAINER
12 MAN THROW OVER BOARD SELF RIGHTING LIFERAFT
SOLAS A & B PACK

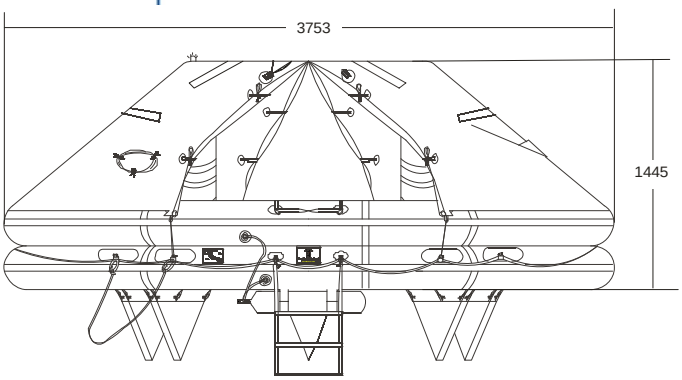

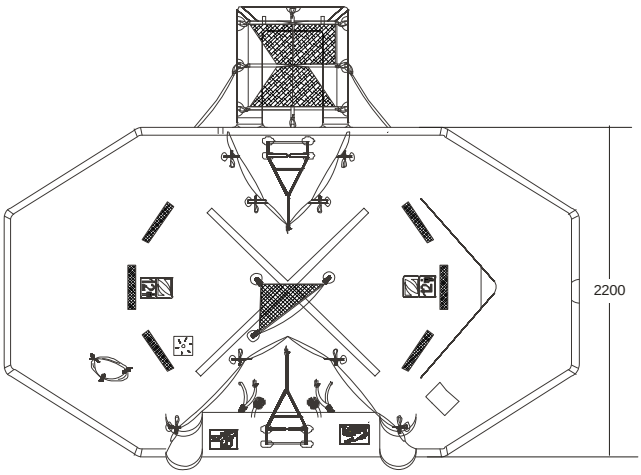

TECHNICAL INFORMATION

12 MAN	A PACK			B PACK		
Container	N13			N12		
Dimensions	X: 1275 mm	Y: 610 mm	Z: 590 mm	X: 1160 mm	Y: 560 mm	Z: 513 mm
	X: 4 ' 2,2 "	Y: 2 ' 0,02 "	Z: 1 ' 11,23 "	X: 3 ' 9,67 "	Y: 1 ' 10,05 "	Z: 1 ' 8,2 "
Liferaft Net Weight	114 kg / 252 pounds			82 kg / 181 pounds		
Max. height stowage	25 m / 83 '			25 m / 83 '		
Painter line length	35 m / 115 '					
Inflation Cylinder	1 x 15 liter					

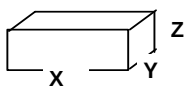 Crate	X: 1355 mm	Y: 650 mm	Z: 740 mm	X: 1240 mm	Y: 620 mm	Z: 700 mm
	X: 4 ' 5,35 "	Y: 2 ' 1,6 "	Z: 2 ' 5,14 "	X: 4 ' 0,82 "	Y: 2 ' 0,41 "	Z: 2 ' 3,56 "
	141 kg / 311 pounds			104 kg / 230 pounds		
	0,652 m3 / 23,02 cubic foot			0,539 m3 / 19,01 cubic foot		

Towing force	2 knots	3 knots
Without sea anchor	60 daN	145 daN
With sea anchor	105 daN	230 daN

Approvals:	EC (MED) – TC – BV

12 TO SR Zodiac 28042008 KLT.doc	Issue : 2	Date: 28/04/2008

Dimensions and weight +/- 5% Zodiac reserves the right to change specification without notice.
For installation, add minimum +10mm for clearance to dimensions of the container.

ZODIAC SOLAS - 1 Quai de Grenelle - 75015 Paris - France
www.zodiacsolas.com