MARINE SOLAS

ROUND CONTAINER
37 MAN THROW OVER BOARD SELF RIGHTING LIFERAFT
SOLAS A & B PACK

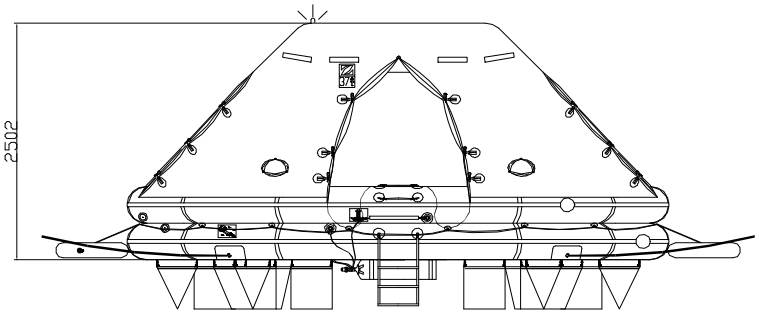

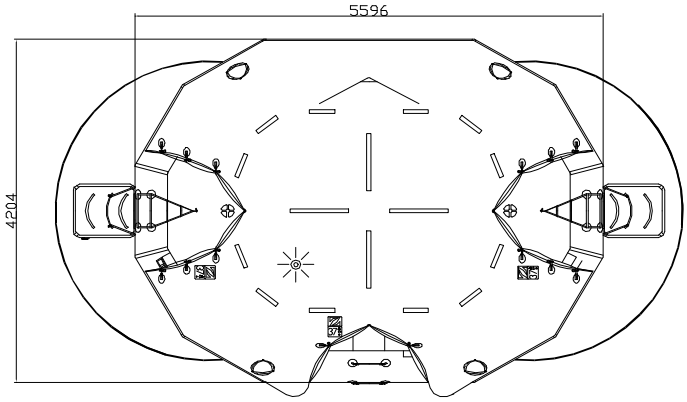

TECHNICAL INFORMATION

37 MAN	A PACK			B PACK		
Container	N17			N16		
Dimensions	X: 1500 mm	Y: 950 mm	Z: 945 mm	X: 1450 mm	Y: 800 mm	Z: 740 mm
	X: 4 ' 11,06 "	Y: 3 ' 1,41 "	Z: 3 ' 1,21 "	X: 4 ' 9,09 "	Y: 2 ' 7,5 "	Z: 2 ' 5,14 "
Liferaft Net Weight	312 kg / 688 pounds			222 kg / 490 pounds		
Max. height stowage	25 m / 83 '			25 m / 83 '		
Painter line length	35 m / 115 '					
Inflation Cylinder	1 x 20 liter + 1 x 24 liter					

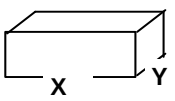	X: 1580 mm	Y: 1050 mm	Z: 1130 mm	X: 1530 mm	Y: 850 mm	Z: 900 mm
	X: 5 ' 2,21 "	Y: 3 ' 5,34 "	Z: 3 ' 8,49 "	X: 5 ' 0,24 "	Y: 2 ' 9,47 "	Z: 2 ' 11,44 "
	378 kg / 834 pounds			262 kg / 578 pounds		
Crate	1,875 m3 / 66,2 cubic foot			1,171 m3 / 41,33 cubic foot		

Towing force	2 knots	3 knots
Without sea anchor	170 daN	365 daN
With sea anchor	210 daN	450 daN

Approvals:	EC (MED) – TC – BV

37 TO SR Zodiac 22112006 KLT.doc	Issue : 2	Date: 22/11/2006

Dimensions and weight +/- 5% Zodiac reserves the right to change specification without notice.
For installation, add minimum +10mm for clearance to dimensions of the container.

ZODIAC SOLAS - 1 Quai de Grenelle - 75015 Paris - France
www.zodiacsolas.com